OM-13

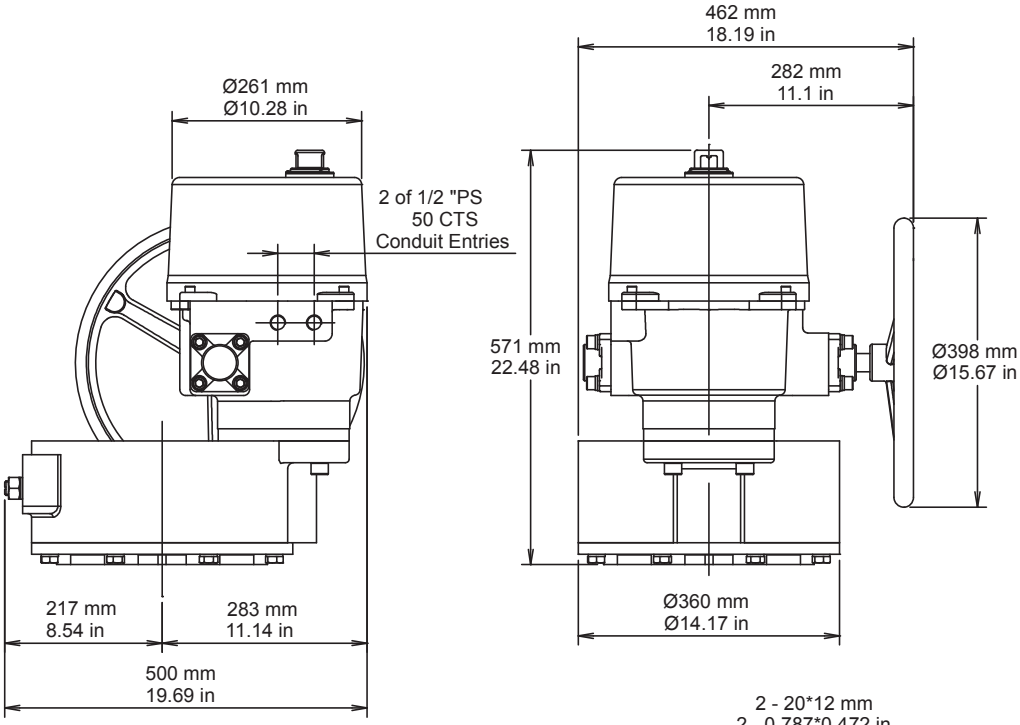
462 mm
18.19 in
282 mm
11.1 in
Ø261 mm
Ø10.28 in
2 of 1/2 "PS
50 CTS
Conduit Entries
571 mm
22.48 in
Ø398 mm
Ø15.67 in
217 mm
8.54 in
283 mm
11.14 in
500 mm
19.69 in
Ø360 mm
Ø14.17 in

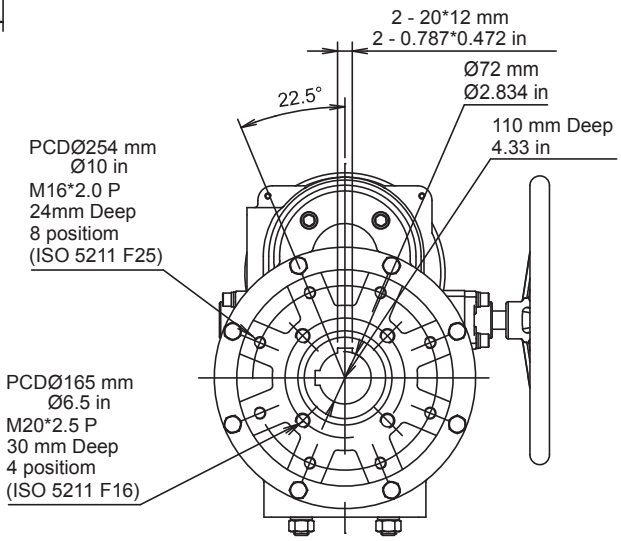
2 - 20*12 mm
2 - 0.787*0.472 in
Ø72 mm
Ø2.834 in
22.5°
110 mm Deep
4.33 in
PCDØ254 mm
Ø10 in
M16*2.0 P
24mm Deep
8 positiom
(ISO 5211 F25)
PCDØ165 mm
Ø6.5 in
M20*2.5 P
30 mm Deep
4 positiom
(ISO 5211 F16)